BK Portable Back Cover Assembly
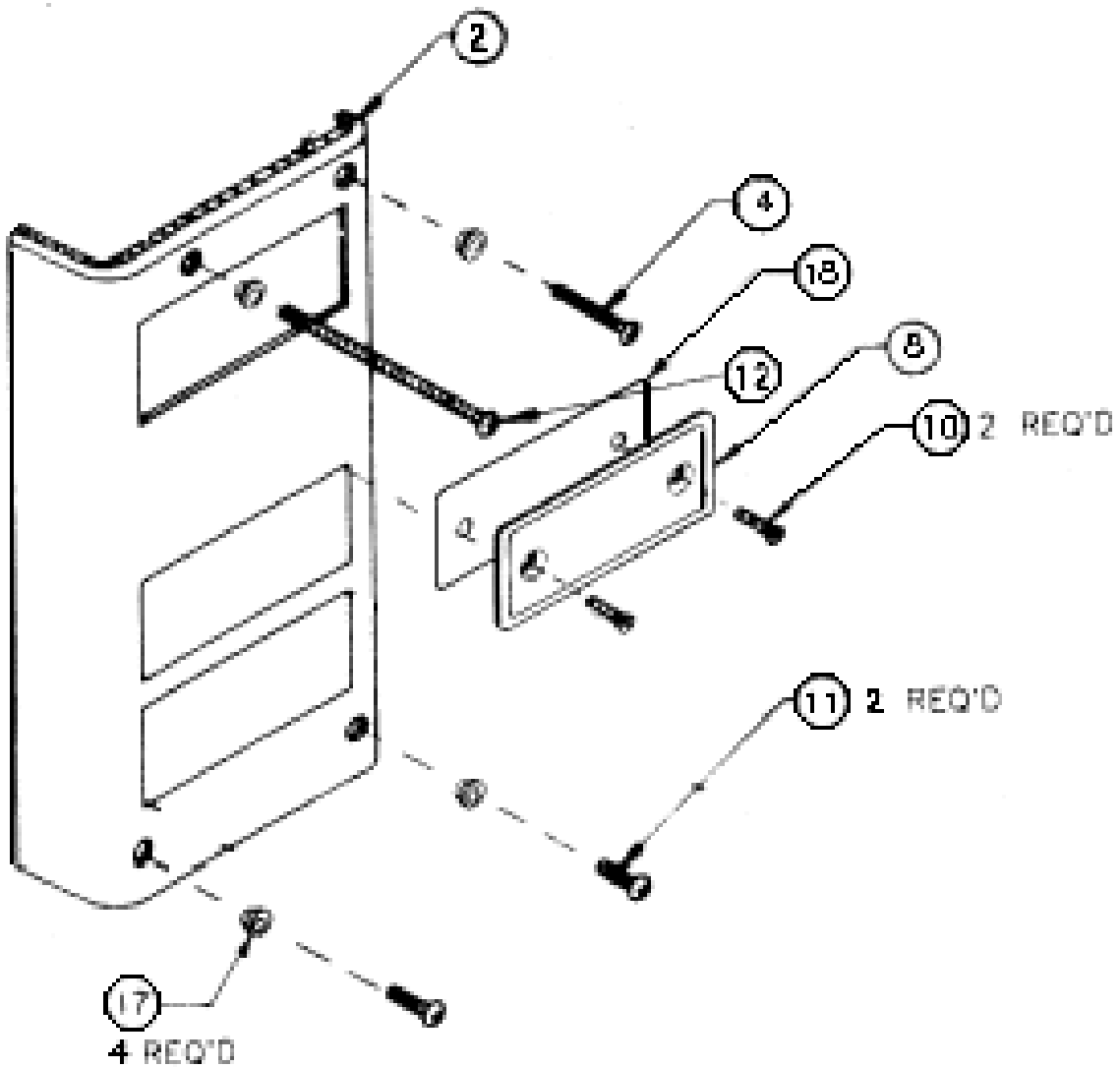
Point to a part to view part